RoHS

LE-FX SERIES NOISE SUPPRESSION CAPACITOR

OKAYA

Features

- Rated 310Vac, Class X2 series
- Variable lead spacing and lead diameter with same capacitance
- Operating temperature up to 110C°
- Lineup for Halogen (Chlorine, Bromine) Free compliant

Applications

- Designed mainly for suppressing noise occurring in power line of electrical appliances.

- *Dimensions ＆Circuit*

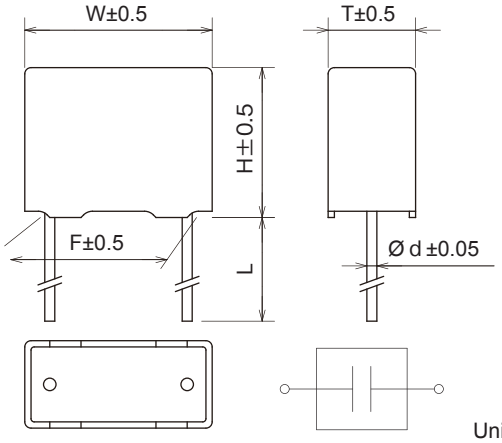

Unit: mm

Safety Standard		File No.
UL	: UL60384-14	E47474
cUL	: CSA E60384-14	E47474
ENEC	: IEC/EN60384-14:2005	SE/0142-1
CQC	: GB/T14472-1998	CQC14001110427
KC	: K60384-14	HU03005-①②③④*

The "ENEC" mark is a common European product certification mark based on testing to harmonized European safety standard. The mark with #14 stands for SEMKO.

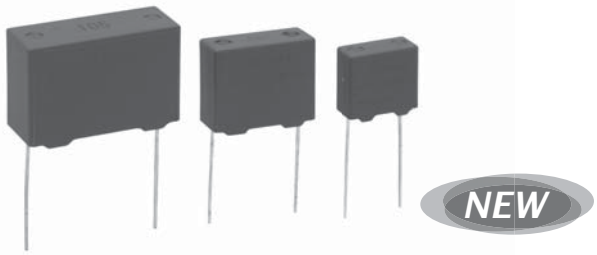

- Model numbering system

L E □ □ □ – F X ① ② ③ ④

Series name | Capacitance | Supported mark | Identifying Code

*Identifying Code

Code	①Lead spacing	②Lead diameter	③Lead length	④Halogen-free
1	10.0mm	φ0.6mm	10mm min.	Non compliant
2	12.5mm	φ0.8mm	4.5±0.5mm	Compliant
3	15.0mm		3.5±0.5mm	
4	22.5mm		30mm min.	
5	27.5mm			

Electrical Specifications

Rated Voltage **310Vac**

Safety Standard	Class	Model Number	Identifying Code	Capacitance μF±10%	Dimensions(mm) W	H	T	F	d	Dissipation Factor	Test Voltage	Insulation Resistance
		LE473-FX	11**	0.047	13.0	11.5	5.5	10.0	0.6			
		LE683-FX	11**	0.068	13.0	12.0	6.0	10.0	0.6			
		LE104-FX	11**	0.1	13.0	12.5	5.5	10.0	0.6			
			31**		18.0	11.0	5.0	15.0	0.6			
		LE154-FX	11**	0.15	13.0	15.0	6.5	10.0	0.6			
			31**		18.0	11.5	6.0	15.0	0.6			
		LE224-FX	11**	0.22	13.0	16.5	7.5	10.0	0.6			
			31**		18.0	13.0	6.5	15.0	0.6			
		LE334-FX	21**	0.33	15.5	16.0	9.0	12.5	0.6			
			31**		18.0	15.0	7.5	15.0	0.6			
			32**		18.0	15.0	7.5	15.0	0.8			
	X2	LE474-FX	32**	0.47	18.0	16.5	8.0	15.0	0.8	C≦1μF 0.005max. (at 10kHz) C＞1μF 0.002max. (at 1kHz)	Line to Line 1,000Vac 50/60Hz 60sec. Line to Case 2,100Vac 50/60Hz 60sec.	C≦0.33μF 15,000MΩmin. (at 100Vdc) C＞0.33μF 5,000ΩFmin. (at 100Vdc) Line to Case 100,000MΩmin. (at 100Vdc)
			41**		26.0	13.5	7.0	22.5	0.6			
			42**		26.0	13.5	7.0	22.5	0.8			
		LE684-FX	32**	0.68	18.0	17.5	10.5	15.0	0.8			
			41**		26.0	15.5	8.0	22.5	0.6			
			42**		26.0	15.5	8.0	22.5	0.8			
		LE105-FX	41**	1.0	26.0	17.0	10.0	22.5	0.6			
			42**		26.0	17.0	10.0	22.5	0.8			
			52**		31.5	17.0	8.5	27.5	0.8			
		LE155-FX	42**	1.5	26.0	21.5	13.0	22.5	0.8			
			52**		31.5	18.5	13.0	27.5	0.8			
		LE225-FX	42**	2.2	26.0	23.0	15.0	22.5	0.8			
			52**		31.5	21.0	15.5	27.5	0.8			

Operating Temperature: -55~+110°C