THIS DRAWING IS UNPUBLISHED. RELEASED FOR PUBLICATION -,- .
© COPYRIGHT - By - ALL RIGHTS RESERVED.

LOC	DIST
AD	47

REVISIONS

P	LTR	DESCRIPTION	DATE	DWN	APVD
	G3	REV PER ECR-15-012700	28AUG2015	ML	SZ

1. MATERIAL: STAINLESS STEEL.
2. FINISH: PASSIVATE.
3. LOCTITE DRI-LOC 204 APPLIED IN THIS AREA.
4. RECOMMENDED P.C. BOARD DRILLED HOLE IS "B" DIAMETER.

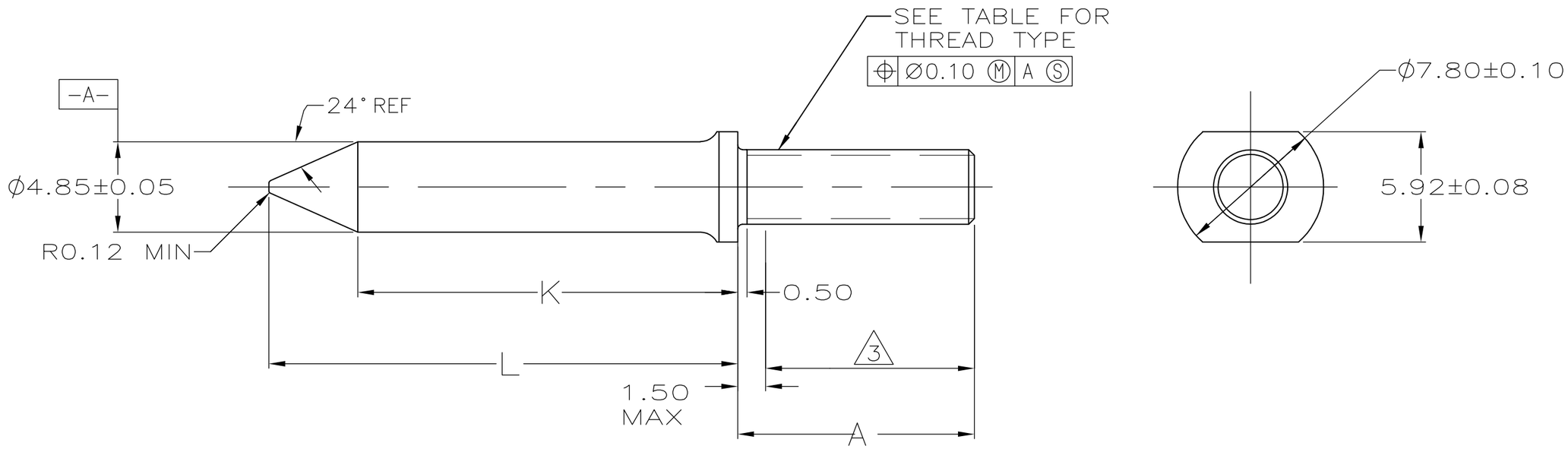

L	K	4 "B" DIA	A	THREAD TYPE	PART NUMBER
31.25	26.48	4.25±0.08	12.7	8-32 UNC 2A	1-223969-0
25.16	20.39	4.10±0.08	9.2	M4 X 7-6G	223969-7
25.16	20.39	4.25±0.08	12.7	8-32 UNC 2A	223969-4
25.16	20.39	4.10±0.08	12.7	M4 X 7-6G	223969-1

THIS DRAWING IS A CONTROLLED DOCUMENT.

DIMENSIONS: mm

TOLERANCES UNLESS OTHERWISE SPECIFIED:

0 PLC	± -
1 PLC	± -
2 PLC	± 0.13
3 PLC	± -
4 PLC	± -
ANGLES	± 2°

MATERIAL: 1

FINISH: 2 3

DWN	J.LOCONDRO	27MAR97
CHK	R.W.ELICKER	27MAR97
APVD	D.SINISI	27MAR97
PRODUCT SPEC	—	
APPLICATION SPEC	—	
WEIGHT	—	

CUSTOMER DRAWING

TE Connectivity

NAME: GUIDE PIN, UNIVERSAL POWER MODULE

SIZE	CAGE CODE	DRAWING NO	RESTRICTED TO
A3	00779	C-223969	—

SCALE	SHEET	REV
4:1	1 OF 1	G3

1470-19 (3/11)