THIS DRAWING IS UNPUBLISHED. RELEASED FOR PUBLICATION .19 .
© COPYRIGHT 19 BY AMP INCORPORATED. ALL RIGHTS RESERVED.

LOC	DIST
AD	12

REVISIONS

P	LTR	DESCRIPTION	DATE	DWN	APVD
	D	RELEASED	29OCT97	MKI	JS

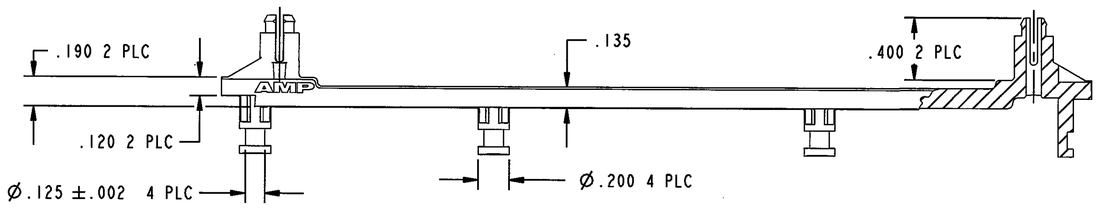

1. MATERIAL: POLYCARBONATE
COLOR: BLACK.
2. PART MASS IS APPROXIMATELY 8.10 GRAMS.
3. USED IN KIT 145308.

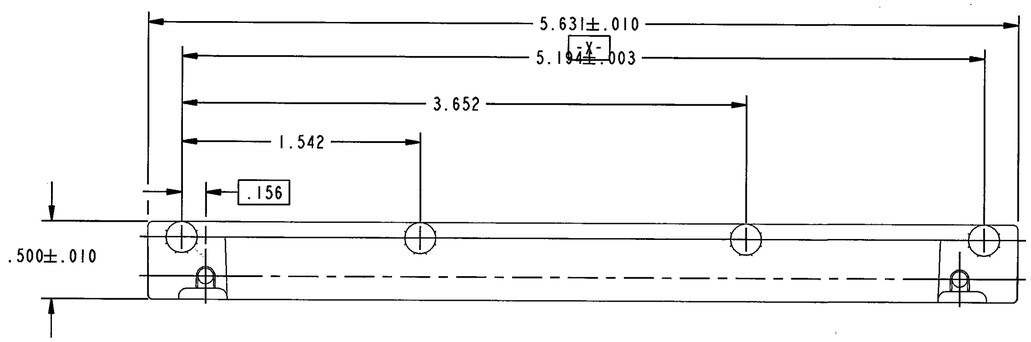

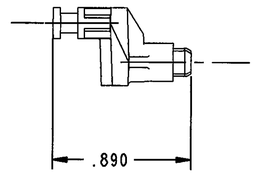

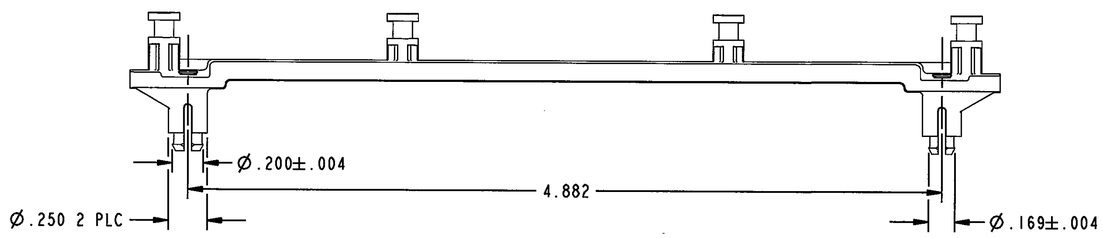

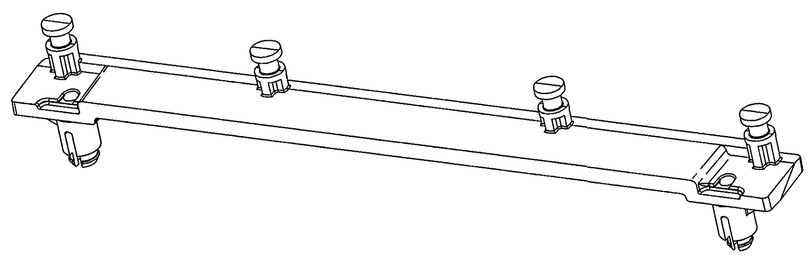

THIS DRAWING IS A CONTROLLED DOCUMENT FOR AMP INCORPORATED. IT IS SUBJECT TO CHANGE AND THE CONTROLLING ENGINEERING ORGANIZATION SHOULD BE CONTACTED FOR THE LATEST REVISION.

DIMENSIONS: INCHES

TOLERANCES UNLESS OTHERWISE SPECIFIED:
0 PLC ±-
1 PLC ±-
2 PLC ±.01
3 PLC ±.005
4 PLC ±-
ANGLES ±0° 30'
FINISH -

MATERIAL

DWN F. F. Berkebile 23jun97
CHK -
APVD -
PRODUCT SPEC -
APPLICATION SPEC -
WEIGHT -

AMP Incorporated
Harrisburg PA 17105-3608

NAME BASE, HEATSINK SUPPORT

SIZE	CAGE CODE	DRAWING NO
A1	00779	C- 145309 -

CUSTOMER DRAWING

SCALE 2:1 SHEET 1 OF 1 REV 0